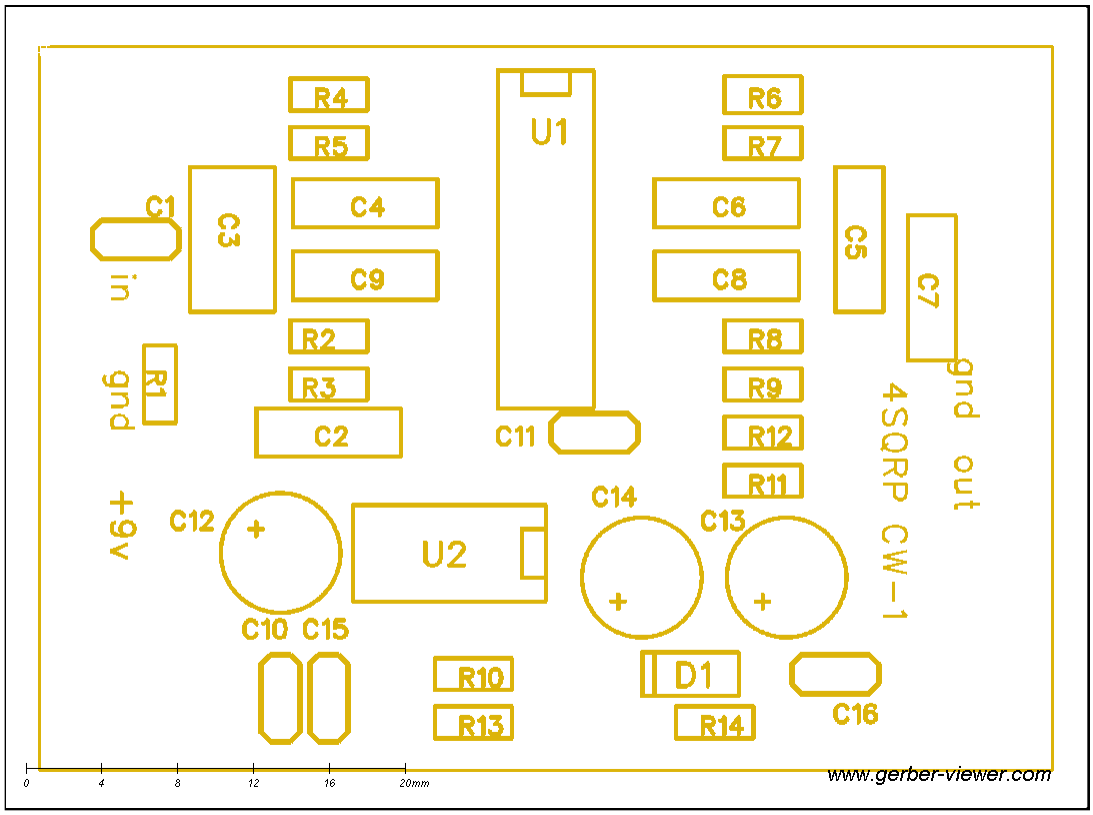
R4
R5
U1
R6
R7
C1
C3
C4
C6
C5
C7
in
C9
C8
R2
R8
R1
gnd
R3
R9
gnd out
C2
C11
R12
4SQRP CW-1
R11
C14
+9v
C12
U2
C13
C10 C15
R10
D1
C16
R13
R14
0 4 8 12 16 20mm
www.gerber-viewer.com