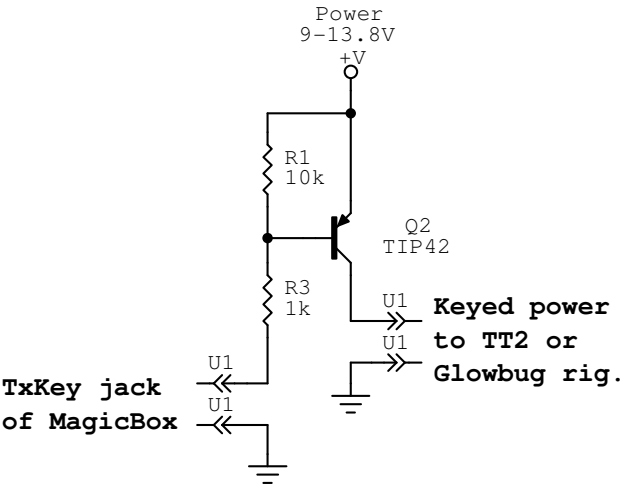

Auxillary circuit for keying rigs that need their power switched "on" to transmit, when using the K8IQY MagicBox.

Jim Kortge, K8IQY
Nov 3. 2011