Cricket 20
Assembly Manual v. 0.1

Copyright © 2021

David Cripe NM0S
Virginia Smith NV5F
The 4 State QRP Group

Introduction

Thank you for purchasing a CRICKET 20 Transceiver. We hope you will enjoy building it and find it a fun addition to your QRP station. This kit was conceived to fill a need within the hobby for an inexpensive, easy to build transceiver with performance a step above anything else available in this price range.

High quality, double sided printed circuit board construction is used, with solder mask and silk-screened component reference designators. All components are through-hole for easy assembly. NO toroids are required. The CRICKET can be constructed by beginners as well as experienced builders. Construction time is approximately 1 - 3 hours, depending on experience level.

Specifications:

Voltage Input:	9v battery, clips mounted to board
Receive Current:	<75mA typical
Transmit Power:	0.75w, typical
Transmit Current:	<120 mA
Operating Frequency:	14.050 or 14.060 MHz, crystals included.
Antenna Connector:	BNC, on board
MDS:	-100 dBm, typical
Audio jack:	1/8” Stereo
Key Jack:	1/8”
T/R Offset:	750 Hz, typical
Sidetone:	Included!
Key:	Included!
Toroids:	None!
Wiring:	None!

First Steps

Before getting started with building the CRICKET 20, take some time to organize and familiarize yourself with the parts provided and check them against the Parts List. Building over a cookie sheet is recommended to minimize parts being lost. To prevent static damage, it is recommended that the ICs not be removed from their anti-static

packaging until you are ready to install them. If parts are missing in your kit, send an email to the CRICKET 20 kitter listed at 4SQRP.com. He will promptly provide replacements.

It is helpful to acquire the necessary tools and supplies before beginning. These include:
*Soldering iron – 20 to 30W, preferably thermostatically controlled.
*Fine 60/40 rosin core solder
*Diagonal cutters
*Needle-nose pliers
*Fine file or emery board
*Flat blade and Phillips screwdrivers
*Clear nail polish

Schematic and Component Placement diagrams are provided as part of documentation package. It is highly recommended to print a copy for reference during construction. As you build, you can check off each construction step as you complete them in order. When you think you are done, you can check the list to verify that all of the parts have been installed.

Important note – Due to supply issues, we had to order capacitors for C3,4,6,9 &18 (i80 pf) from different parts suppliers. One version has legs that are 3 cm long and spaced 2mm apart, the other with cm long and spaced 5mm apart. If you get five of the "squat" 180 pf caps, you will need to bend and push them into the holes for C9 & C18.

Step 1 - Key

( ) Snap off the key strip and keying adapter, which are the ½" wide sections at the right-most side of the board. The board is scored with a V-groove so that they break free readily. Once separated, lightly sand the rough edges of the break until smooth.

( ) Locate the knob and the 8-32 screw (this is the larger of the 3 screws provided). Assemble the knob onto the board by inserting the screw through the silver side of the key board, and tightening the knob onto it.

Step 2 – Battery Connectors

( ) Locate the two battery clips. Obtain a 9v battery. We need to be sure that the spacing of the battery clips on the board is proper so that the battery will attach properly.

( ) Hold the battery flat with the terminals pointing away from you and the positive (+) terminal on the right. Snap the battery clips onto the battery, mounting pins facing down, and insert the battery clips through the holes on the board. Be careful not to let the clips touch and short out the battery!

( ) Double check that the positive terminal of the battery and the mating female battery clip is at the right. Flip the board over, holding the board down firmly on the battery, and solder the battery clips into place.

( ) Remove the battery, and proceed.

Step 3 – Resistors and Inductor

Insert, solder, and check off each when completed.

	Ref	Value	Color Code
( )	R1	100	Brown-Black-Brown
( )	R9	10k	Brown-Black-Orange
( )	R10	10k	Brown-Black-Orange
( )	R2	1.0M	Brown-Black-Green
( )	R3	1.0M	Brown-Black-Green
( )	R6	1.0M	Brown-Black-Green
( )	R4	330	Orange-Orange-Brown
( )	R11	4.7K	Yellow-Violet-Red
( )	R5	47k	Yellow-Violet-Orange
( )	R7	47k	Yellow-Violet-Orange
( )	R8	47k	Yellow-Violet-Orange
( )	R12	470k	Yellow-Violet-Yellow
( )	L4	4.7uH	Yellow-Violet

Step 4 – Semiconductors

Be certain that these components are inserted correctly, according to the silkscreen diagram.

( )	Q7	SS8550
( )	Q1	2N7000
( )	Q2	2N7000
( )	Q3	2N7000
( )	Q4	2N7000
( )	Q5	2N7000
( )	Q6	2N7000
( )	D1	1N914
( )	D2	1N914
( )	D3	1N914
( )	U1	NJM2113

Step 5 – Capacitors

Be certain to insert C14 in the proper polarity orientation as labeled in the board. C3 is a 180p capacitor with a narrower lead spacing than the other four 180 p caps.

	Ref	Value	Type	Label	
( )	C2	0.01	Monolithic	103	
( )	C7	0.01	Monolithic	103	
( )	C16	0.01	Monolithic	103	
( )	C8	0.1	Ceramic Disk	104	
( )	C17	0.1	Ceramic Disk	104	
( )	C11	1.0	Monolithic	105	
( )	C13	1.0	Monolithic	105	
( )	C5	47p	Monolithic	47	This part has 0.2” lead spacing
( )	C10	100p	Monolithic	101	
( )	C15	100p	Monolithic	101	
( )	C3	180p	Monolithic	181	This part has 0.1” lead spacing
( )	C4	180p	Monolithic	181	
( )	C6	180p	Monolithic	181	
( )	C9	180p	Monolithic	181	
( )	C18	180p	Monolithic	181	
( )	C12	680p	Monolithic	681	
( )	C1	12p	Monolithic	12	
( )	C14	100u	Electrolytic	100u	

Step 6 - Final Assembly

( ) Solder the BNC connector to the board in the J1 position. Be careful in getting the center conductor inserted through the board – this wire is somewhat brittle.

( ) Solder the SPDT power switch onto the board in the position to the left of the battery contacts.

( ) Solder the headphone jack to the board in the J2 position.

( ) Locate the six pin DIP socket. Using diagonal cutters, snip it in half to make two, three pin sockets. Use the diagonal cutters to clean up the broken face of the half-

socket. Snip off the center lead of the socket flush to the black plastic body. Solder the socket onto the board in the X1/J4 position

( ) Locate the 6-32 screws, aluminum spacers, and hex nuts. Assemble the key to the board by passing the screws through the top of the key assembly and using the spacers between the key and the PC board. Install the nuts on the bottom side of the board and tighten with the screwdriver. If desired, add a tiny drop of clear fingernail polish to the screw threads at the nut to help keep the nut from working loose.

( ) Add the four adhesive rubber feet to the bottom of the board in the four corners.

Step 7 – Keying Adapter Option

For those wanting to key the Cricket using an external keyer, a special adapter is provided. It installs instead of the hand key and includes a standard 1/8" jack to connect to a keyer circuit.

( ) Install the 1/8" audio jack to the keying adapter board.

( ) Install the knob to the board using the 8-32 screw with the two flat washers under the screwhead.

( ) Install the keying adapter to the board using the screws and spacers from the hand key assembly. When assembled, the screw head should firmly contact the keying pad beneath it.

You are done!

The Cricket is a minimalist 20M CW transceiver designed to be a simple, easy-to-build project. It is comprised of 39 electrical components but maximizes features and performance of the parts it has.

The Cricket 40 – Cricket 20's older brother - was designed for the Kit Building Workshop for Ozarkcon 2019. Selection of a build project for an event such as this is always a challenge, because there is always a good number of beginning hobbyists there for whom this might be their first soldering experience. It needs to be simple enough that it can be completed in an hour or two of allotted time for the event. Finally, it must be something useful and fun enough to be worth building.

The Cricket was designed to meet these requirements, as well as to be something *other* than the ubiquitous low power radio kit that everyone has already built. The starting point was the notorious 'Pixie' transceiver.... but from there, the resemblance ends!

For anyone who has actually built and operated one, the Pixie is a cheap and simple kit, but has serious performance deficiencies. It is underpowered (0.3W); its harmonic output does not meet FCC requirements; the receiver is a bit deaf and very prone to AM broadcast bleed through and 60 Hz hum pickup.

The Cricket starts its circuit with that section of the Pixie that works well - the crystal oscillator. It's a very conventional Colpitts circuit, using a MOSFET transistor as the active device.

The output of the oscillator is coupled to the gate of a 2N7000 MOSFET. This transistor is configured as a Class-E power amplifier, delivering 3/4W from a fresh 9v battery. The output network uses spiral PC traces to make up the inductors, and all harmonics are attenuated at least 50 dB.

When the circuit is operating as a receiver, the key is open and there is no DC presented to the drain of the PA MOSFET, but the drive is present on the gate of the PA FET. RF signals entering from the antenna are mixed by the switching action of the PA FET and converted to audio. This circuit is much more linear in its action than the bipolar transistor used in the Pixie, and results in better immunity to AM broadcast interference and 60 Hz hum.

The detected audio signal is coupled to U1, an NJM2113, which is a low-noise headphone driver IC.

When the key is closed, a number of things happen. Nine volts are applied to the drain choke, and the PA begins to generate RF power to the antenna. Voltage is applied to the gate of Q4, which mutes the audio amplifier, and voltage is applied to the Q5-Q6 sidetone oscillator circuit, sending the sidetone to the headphone jack. Voltage is also applied to the gate of Q3, which switches out the frequency offset capacitor in series with the crystal, permitting the transmitter to operate directly on the crystal frequency.

All this from 39 common electronic components!

The receiver is designed to drive a stereo output, either earbuds or speakers. If a mono speaker is plugged into the output jack, the receiver will still work, but the sidetone will no longer be audible.

73 Dave NM0S

Edited for Cricket 20 by Virginia NV5F

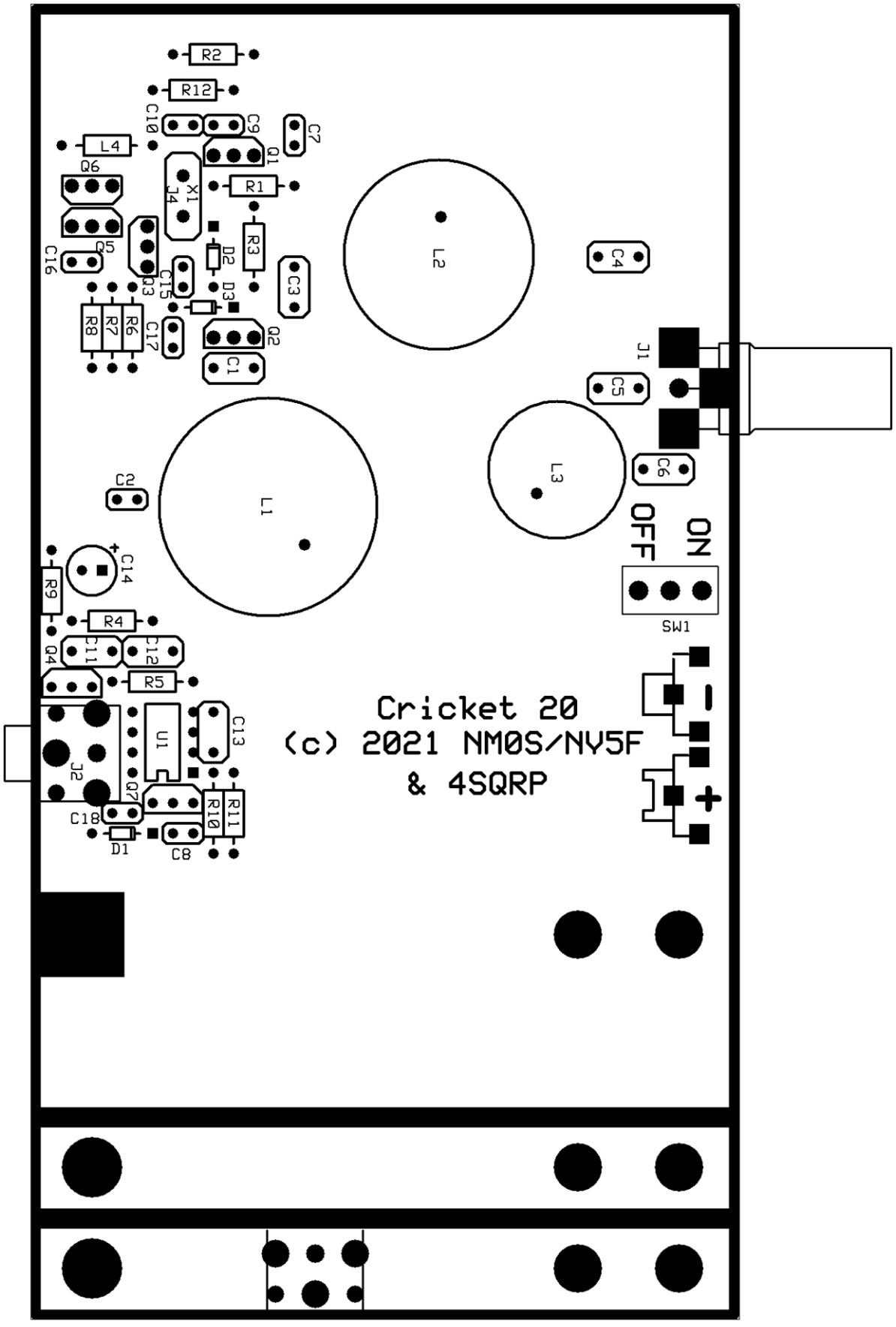
R2
R12
C10
C9
C7
L4
Q1
Q6
X1
J4
R1
Q5
R3
C16
D2
C4
L2
C3
C15
Q3
D3
R8
R7
R6
C17
Q2
C1
J1
C5
C6
L3
C2
L1
OFF
ON
C14
R9
SW1
R4
Q4
C11
C12
R5
Cricket 20
(c) 2021 NM0S/NY5F
& 4SQRP
U1
C13
J2
Q7
R10
R11
C18
D1
C8

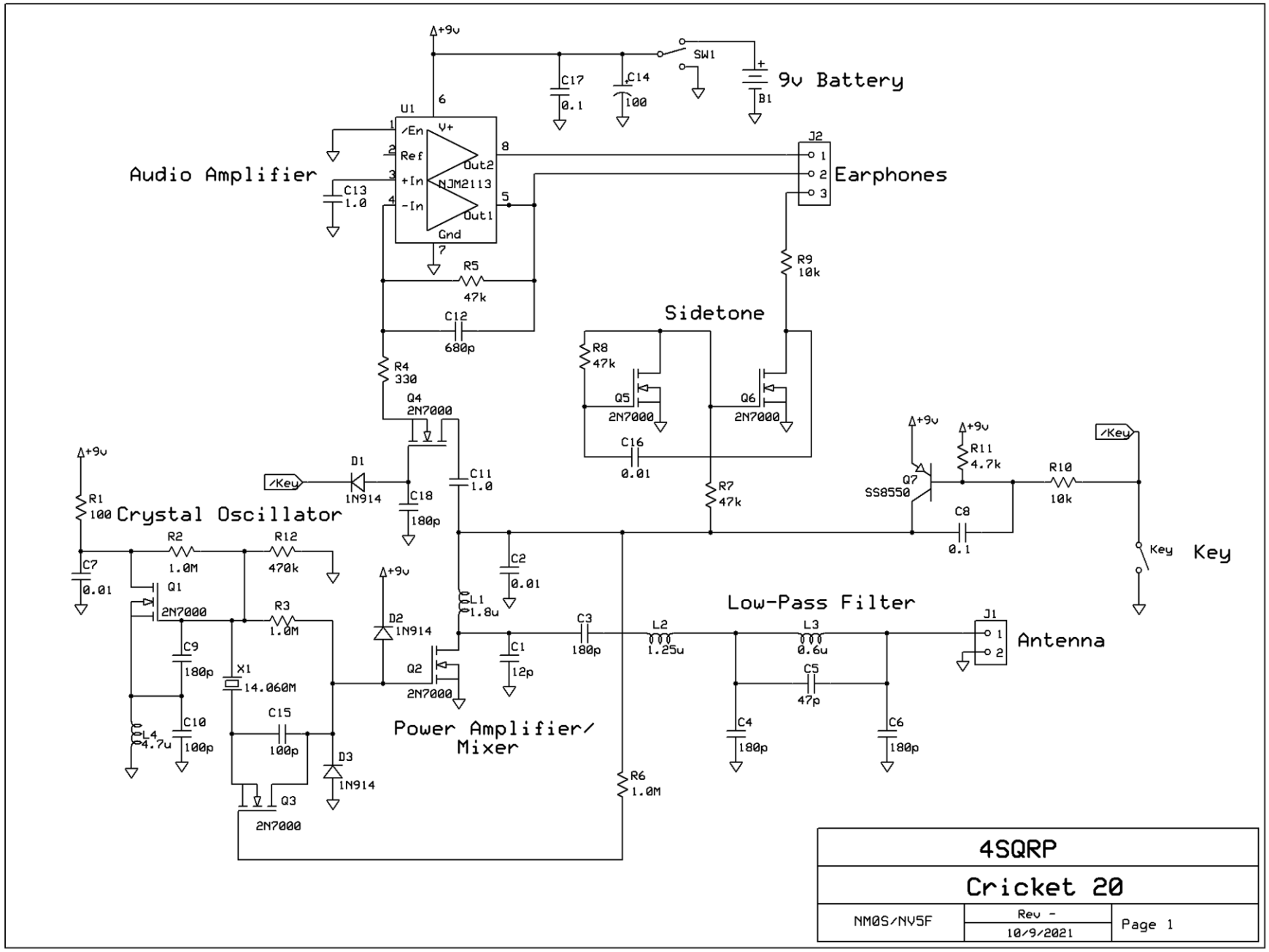
+9v
SW1
9v Battery
B1
C17
0.1
C14
100
U1
/En
Ref
+In
-In
Gnd
V+
Out2
Out1
NJM2113
Audio Amplifier
C13
1.0
J2
Earphones
R5
47k
R9
10k
C12
680p
Sidetone
R8
47k
Q5
2N7000
Q6
2N7000
C16
0.01
R4
330
Q4
2N7000
R7
47k
/Key
D1
1N914
C11
1.0
C18
180p
R1
100
Crystal Oscillator
R2
1.0M
R12
470k
C7
0.01
Q1
2N7000
R3
1.0M
C9
180p
X1
14.060M
C10
100p
L4
4.7u
C15
100p
D3
1N914
Q3
2N7000
+9v
D2
1N914
Q2
2N7000
L1
1.8u
C2
0.01
C1
12p
C3
180p
Power Amplifier/
Mixer
R6
1.0M
Low-Pass Filter
L2
1.25u
L3
0.6u
C5
47p
C4
180p
C6
180p
J1
Antenna
Q7
SS8550
R11
4.7k
R10
10k
C8
0.1
Key
Key
4SQRP
Cricket 20
NM0S/NV5F
Rev -
10/9/2021
Page 1

PARTS LIST

Value	Description	Parts	Qty	Label
0.01u	Ceramic Disk	C2, C7, C16	4	103
0.1u	Ceramic Disk	C8, C17	2	104
1.0u	Monolithic	C11, C13	2	105
100u	Electrolytic	C14	1	100u
47p	Monolithic	C5	1	47
180p	Monolithic	C3, C4, C6, C9, C18	5	181
100p	Monolithic	C15	1	101
100p	Monolithic	C10	1	101
12p	Monolithic	C1	1	12
1N914	glass diode	D1, D2, D3	3	
ANT	BNC	J1	1	
Phones, Key	1/8" Stereo	J2, J3	2	
Xtal Socket	SIP Socket	J4	1	
Battery +	9v +	J5	1	
Battery -	9v -	J6	1	
Switch	SPDT	SW1	1	
4.7u	Molded axial	L4	1	Yellow-Violet
2N7000	TO-92 transistor	Q1,Q2,Q3,Q4,Q5,Q6	6	2N7000
SS8550	TO-92 transistor	Q7	1	8550
10k	1/4w resistor	R9, R10	2	Brown-black-orange
1.0M	1/4w resistor	R2, R3, R6	3	Brown-black-green
330	1/4w resistor	R4	1	orange-orange-brown
100	1/4w resistor	R1	1	Brown-black-brown
4.7k	1/4w resistor	R11	1	Yellow-violet-red
470k	1/4w resistor	R12	1	Yellow-violet-yellow
47k	1/4w resistor	R5,R7,R8	3	yellow-violet-orange
NJM2113	DIP8 IC	U1	1	NJM2113
14.06	Crystal	X1	1	14.06
14.05	Crystal	X2	1	14.05
6-32 x 3/8	screw		2	
8-32 x 3/8	screw		1	
6-32 nut	nut		2	
6 - 1/8"	spacer		2	
#8	flat washer		2	
knob	knob		1	
rubber feet	rubber feet		4	
PCB	PCB		1	